Problem set on Resonance

1.

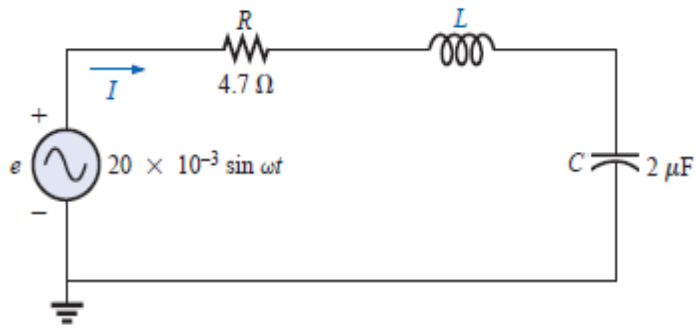

a. Find the value of L in milli henries if the resonant frequency is 1800 Hz.
b. Calculate X_L and X_C. How do they compare?
c. Find the magnitude of the current I rms at resonance.
d. Find the power dissipated by the circuit at resonance.
e. What is the apparent power delivered to the system at resonance?
f. What is the power factor of the circuit at resonance?
g. Calculate the Q of the circuit and the resulting bandwidth.
h. Find the cutoff frequencies, and calculate the power dissipated by the circuit at these frequencies.

1. a. Find the bandwidth of a series resonant circuit having a resonant frequency of 6000 Hz and Qs of 15.
   b. Find the cutoff frequencies.
   c. If the resistance of the circuit at resonance is 3 ohms what are the values of X_L and X_C in ohms?
   d. What is the power dissipated at the half-power frequencies if the maximum current flowing through the circuit is 0.5 Ampere?

2. Design a series resonant circuit with an input voltage of 5 V to have the following specifications:
   a. A peak current of 500 mA at resonance
   b. A bandwidth of 120 Hz
   c. A resonant frequency of 8400 Hz
   Find the value of L and C and the cutoff frequencies.

3. A series resonant circuit will resonate at a frequency of 1 MHz with a fractional bandwidth of 0.2. If the quality factor of the coil at resonance is 12.5 and its inductance is 100 mH, determine the following:
   a. The resistance of the coil.
   b. The additional resistance required to establish the indicated fractional bandwidth.
   c. The required value of capacitance.

4.

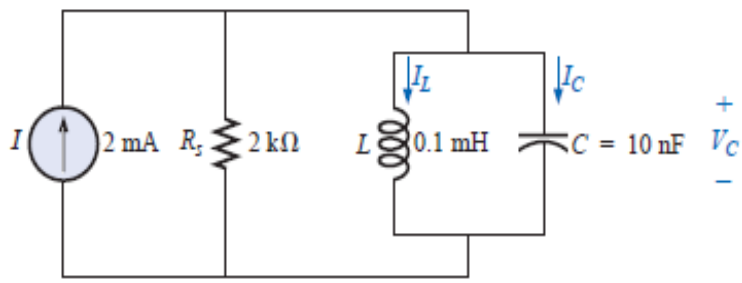

For the "ideal" parallel resonant circuit:

a. Determine the resonant frequency (fp).
b. Find the voltage V_C at resonance.
c. Determine the currents I_L and I_C at resonance.
d. Find Qp. (Quality Factor)

5.

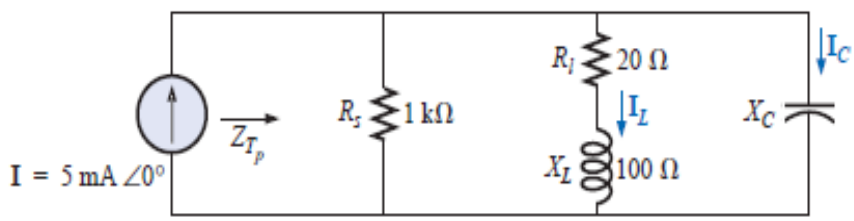

a. Find the value of X_C at resonance (fp).
b. Find the total impedance Z_{Tp} at resonance (fp).
c. Find the currents I_L and I_C at resonance (fp).
d. If the resonant frequency is 20,000 Hz, find the value of L and C at resonance.
e. Find Qp and the BW.

6. For the network:

a. Find the value of X_L for resonance.
b. Find Q_L.
c. Find the resonant frequency (fp) if the bandwidth is 1 kHz.
d. Find the maximum value of the voltage V_C.
e. Sketch the curve of V_C versus frequency. Indicate its peak value, resonant frequency, and band frequencies.

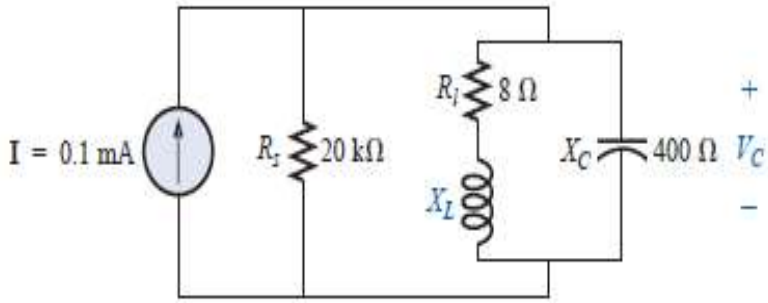

7.

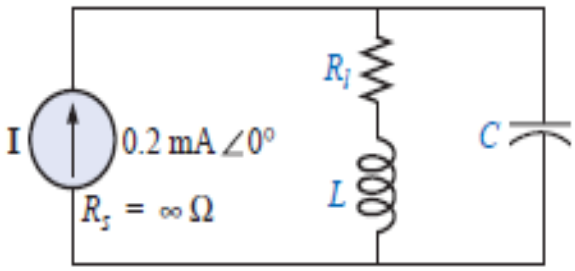

Design the network of above figure to have the following characteristics:

a. BW = 500 Hz

b. Qp = 30

c. V_{Cmax} = 1.8 V